PCI Bus Expansion Chassis
Short size, 2-Slots, BLACK

ECH-PCI-CE-H2C

This product is an expansion chassis that adds PCI bus slots to a PC. It can add PCI bus slots by connecting an optional expansion adapter (EAD-CE-LPE, EAD-CE-EC). The board that can be mounted is short-type [176.5 (L) x 107 (H) mm] PCI boards.

* Specifications, color and design of the products are subject to change without notice.

Features

PCI bus (5V/32bit 33MHz) slots can be added to your PC.
Two PCI bus (5V/32bit 33MHz) slots can be added.
ECH-PCI-CE-H2C adds two PCI bus slots.
This expansion chassis is connected to a PC using an optional expansion adapter.

Short-type PCI bus boards can be connected. (ECH-PCI-CE-H2C)
You can connect two short-type [176.5 (L) x 107 (H) mm] PCI boards.
ECH-PCI-CE-H2C can be connected two PCI Boards.

The best case size design matched to CX100n and the BX100n series.
The design is not ruined by designing the case size matched to CX100n and the BX100n series.

The cTEST controller realizes further Extensions
Be accessible in cTEST controller CX100n (or BOX computer BX100n) and cable assembly.
Can use it in unification and separate by installing attached insulator bracket.

A wide range of power supplies (10.8 - 31.2VDC) supported
As the product supports a wide range of power (10.8 - 31.2VDC), it can be used in a variety of power environments.

The cooler fan can be installed according to the usage.
The cooler fan can be installed according to the usage.

Specification

Specification

Item	ECH-PCI-CE-H2C
Compatible bus	PCI Local Bus Specification Rev2.3 (+5Vtype)
Address space	32bit memory address, I/O address
Interrupt level	INTA - INTD
Bus operating clock	33MHz (Max.)
Number of user-available slots	2 slots (short size)
Acceptable board sizes (mm)	176.5(L) x 107(H)
Power supply	
Expansion slot supplied power (The output current must not exceed the value on the right.)	+5VDC 5A (Max.) +3.3VDC 2A (Max.) +12VDC 1A (Max.) -12VDC 0.3A (Max.)
Maximum total power capacity	48W
Rated input voltage	12 - 24VDC
Range of input voltage	10.8-31.2VDC
Power consumption	12V 4.0A(Max.), 24V 2.0A(Max.)
Outside dimensions(mm)	270.0(W) x 182.0(H) x 50.0(L) (without rubber feet)
Weight	3.5 kg

Environmental specification

Item		Specification
Operating temperature		0 - 50ºC
Operating humidity		20 - 80%RH(No condensation)
Storage temperature		0 - 60ºC
Storage humidity		10 - 90%RH(No condensation)
Floating dust particles		Not to be excessive
Corrosive gases		None
Line-noise resistance	Line noise	AC line / ±2kV Signal line / ±1kV (IEC61000-4-4 Level 3,EN61000-4-4 Level 3)
	Static electricity resistance*1	Contact discharge / ±2kV (IEC61000-4-2 Level 1, EN61000-4-2 Level1
		Atmospheric discharge / ±4kV (IEC61000-4-2 Level 2, EN61000-4-2 Level 2)
Vibration resistance	Sweep resistance*1	10 - 57Hz / semi-amplitude 0.075 mm, 57 - 150Hz/1.0G 40 min. each in x, y, and z directions (JIS C60068-2-6-compliant, IEC60068-2-6-compliant)
Impact resistance		10G, half-sine shock for 11 ms in x, y, and z directions (JIS C60068-2-27-compliant, IEC60068-2-27-compliant)
Grounding		Class D grounding (previous class 3 grounding), SG-FG / continuity

*1: It is provided with “PCI Express® External Cabling Specification”.

Outside dimensions of acceptable board (Max.)

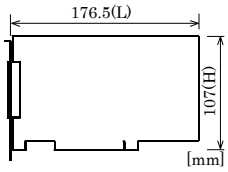

⚠ CAUTION

If you use this product in a noisy environment, the ferrite core must be installed in the PCI Express cable at a position near the main body of this product side connector and in the AC cable at a position near the plug of AC Adapter. For the type of ferrite core, refer to the following table (Equivalent types are also available.)

Name	Maker	Turn
FRC2009A-6 or E04SR200935A	CONTEC or SEIWA	1~2

When attaching a ferrite core to the cable, coil it around 0-1 times near the connector while leaving it open, and then close it.

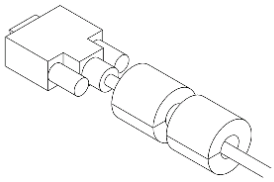

PCI Express cable [Turn :1] x 2pcs

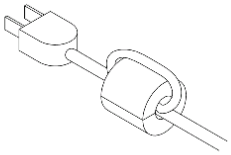

AC power cable [Turn :2] x 1pc

Combinations of Expansion Adapters and Expansion Chassis

The expansion adapters and expansion chassis can be used in the following combinations:

Expansion adapter	Expansion chassis ECH-PCI-CE							
	-H2B	-H2C	-F2B	-H4B	-F4B	-H4A	-H7A	-H13A
EAD-CE-EC	O	O	O	O	O	O	x	x
EAD-CE-LPE	O	O	O	O	O	O	O	O

Expansion adapter (Option)

Expansion Adapter for Express Card Slot : EAD-CE-EC

Expansion Adapter for PCI Express Slot : EAD-CE-LPE

Check the CONTEC's Web site for more information on these expansion adapters.

Accessory (Option)

AC adapter : IPC-ACAP12-04

PCI Express Cable (1m)* : CB-CE-1

PCI Express Cable (3m)* : CB-CE-3

Fan 41x12 : FAN0412

*Need for connect to CX100n, BX100n.

Packing List

Expansion chassis [ECH-PCI-CE-H2C] …1
This User's Manual …1
Slot cover …1
Bracket …2
Bracket fixed screw…8
Body fixed screw …4
Board fixed screw …2
Power connector …1
Contact…4
Rubber feet …4

Physical Dimensions

Vertically placed

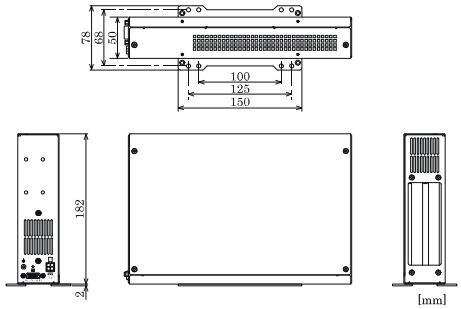

* When you fasten the bundled brackets to be fixed to the body, you should use the attached screws (M4 x 10).

Horizontally placed

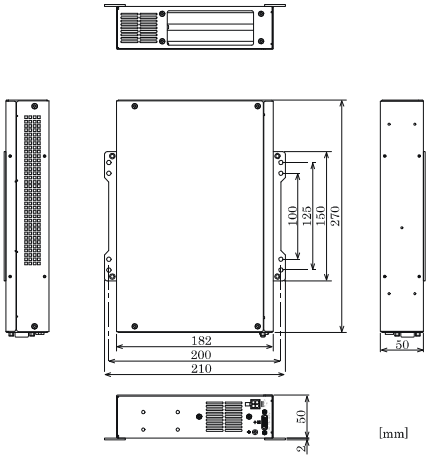

* When you fasten the bundled brackets to be fixed to the body, you should use the attached screws (M4 x 10).

ECH-PCI-CE-H2C + CX100n

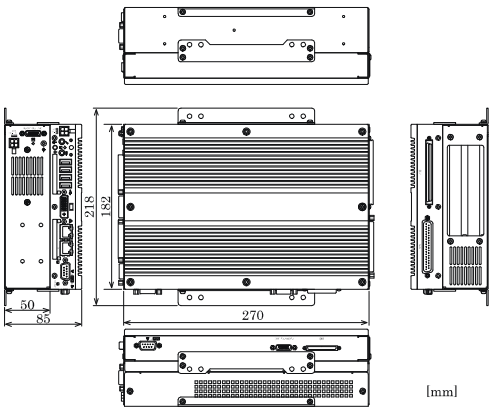

⚠ CAUTION

When using this chassis, keep it at least 20mm away from any object such as the wall for cooling purposes.

Restrictions

This product is used in a combination with the optional expansion adapter. The following restrictions apply to the situation when the expansion adapter is connected to the expansion chassis.
This product has restrictions on the types of PCs and boards that can be used.
Be sure to check the following restrictions before use.

< Restrictions of PC>

This product uses the PCI-to-PCI Bridge to extend the bus.
The PCI boards plugged in PCI slots in this product are recognized if the PCI-to-PCI bridge is recognized by the BIOS in the PC used. Ask the PC vendor for whether the BIOS recognizes the PCI-to-PCI bridge.

< Restrictions on transfer rate >

When the expansion chassis accommodates a board that performs high-speed transfer such as bus mastering, the overall transfer rate may be lower than that of PCI bus slots in the main unit of a desktop PC.
This is caused by bus extension by the PCI-to-PCI Bridge.
The transfer rate may vary with the system configuration and the type of the PC.

< Restrictions of PCI board>

None of the following boards can be plugged into any expansion slot in this product.

- Video display board (VGA board)
- Board to connect a PCI bus expansion chassis
- Board explicitly stated not to be used with the PCI-to-PCI Bridge
- Some boards, even PCI-compliant ones, may not work depending on their specifications