Digital Output Board with Relay-Isolation
for PCI Express

RRY-16C-PE

This product is PCI Express bus-compliant interface board that output signals to lead relay contacts.
The RRY-16C-PE provides up to 16 independent common lead relay contact outputs. Independent common terminal provided per channel, capable of supporting a different external power supply.
High-capacity output rating is designed to be a maximum of 2A 125V (AC), 2A 30V (DC) per channel.
Windows/Linux driver is bundled with this product.
Possible to be used as a data recording device for LabVIEW, with dedicated libraries.

* Specifications, color and design of the products are subject to change without notice.

Features

16 independent common read relay contact outputs (with a single make contact)

This product has 16 reed relay outputs with a single make contact. Independent common terminal provided per channel, capable of supporting a different external power supply. High-capacity output rating is designed to be a maximum of 2A 125V (AC), 2A 30V (DC) per channel.

Functions and connectors are compatible with PCI compatible board RRY-16C(PCI)H.

The functions same with PCI compatible board RRY-16C(PCI)H are provided. In addition, as there is compatibility in terms of connector shape and pin assignments, it is easy to migrate from the existing system.

Windows/Linux compatible driver libraries are attached.

Using the attached driver library API-PAC(W32) makes it possible to create applications of Window/Linux. In addition, a diagnostic program by which the operations of hardware can be checked is provided.

LabVIEW is supported by a plug-in of dedicated library VI-DAQ.

Using the dedicated library VI-DAQ makes it possible to make a LabVIEW application.

Specification

Items		Specifications
No. of Output Channels		16 channels (independent common)
Output Format		Reed Relay (1a, make) Output
Relay Contact Spec.	Max. rating capacity	2A 125V(AC), 2A 30V(DC) (load resister)
	Max. permitted voltage	125V (Max.) *1, *2
	Max. Carry Current	2A (Max.)
	Contact resistance (Initial state)	30mΩ or less
	Operating time (At the time of ON)	Within 7ms
	Recovery time (At the time of OFF)	Within 6ms
	Mechanical Life Expectancy	20,000,000 operations min or more Switching times : 180/min
	Electrical lifetime	100,000 operations min or more Switching times : 20/min
	Relay Type	PCN-105D3MHZ
I/O Addresses		8 bits x 32 ports boundary
Max. board count in One System		16 boards including this board
Power Consumption		3.3VDC 1100mA (Max.)
Operating Condition		0 - 50°C , 10 - 90%RH (No condensation)
Bus Specification		PCI Express Base Specification Rev. 1.0a x1
Dimension(mm)		121.69(L) x 110.18(H)
Connector used		37-pin D-SUB, female connector DCLC-J37SAF-20L9E(mfd. by JAE) or equivalent to it
Weight		150g

*1 Please exceed neither max. permitted voltage nor max. rating capacity of the use relay when using it by the voltage that exceeds 30VDC. Doing so can cause a malfunction.
*2 The potential difference between channels must not exceed 125V in the maximum. Doing so can cause a malfunction.

Board Dimensions

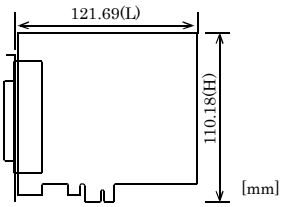

The standard outside dimension (L) is the distance from the end of the board to the outer surface of the slot cover.

Support Software

Windows version of digital I/O driver API-DIO(WDM) / API-DIO(98/PC) [Stored on the bundled CD-ROM driver library API-PAC(W32)]

The API-DIO(WDM) / API-DIO(98/PC) is the Windows version driver library software that provides products in the form of Win32 API functions (DLL). Various sample programms such as Visual Basic and Visual C++, etc and diagnostic program useful for checking operation is provided.

< Operating environment >

OS	Windows Vista, XP, Server 2003, 2000
Adaptation language	Visual Basic, Visual C++, Visual C#, Delphi, C++ Builder

You can download the updated version from the CONTEC's Web site (http://www.contec.com/apipac/). For more details on the supported OS, applicable language and new information, please visit the CONTEC's Web site.

Linux version of digital I/O driver API-DIO(LNX) [Stored on the bundled CD-ROM driver library API-PAC(W32)]

The API-DIO(LNX) is the Linux version driver software which provides device drivers (modules) by shared library and kernel version. Various sample programs of gcc are provided.

< Operating environment >

OS	RedHatLinux, TurboLinux (For details on supported distributions, refer to Help available after installation.)
Adaptation language	gcc

You can download the updated version from the CONTEC's Web site (http://www.contec.com/apipac/). For more details on the supported OS, applicable language and new information, please visit the CONTEC's Web site.

Data acquisition VI library for LabVIEW VI-DAQ (Available for downloading (free of charge) from the CONTEC web site.)

This is a VI library to use in National Instruments LabVIEW. VI-DAQ is created with a function form similar to that of LabVIEW's Data Acquisition VI, allowing you to use various devices without complicated settings.
See http://www.contec.com/vidaq/ for details and download of VI-DAQ.

Cable & Connector

Cable(Option)

Flat cable with both-ends 37-pin D-SUB connector
: PCB37P-1.5 (1.5m)
: PCB37P-3 (3m)
: PCB37P-5 (5m)

Shield cable with both-ends 37-pin D-SUB connector
: PCB37PS-0.5P (0.5m)
: PCB37PS-1.5P (1.5m)
: PCB37PS-3P (3m)
: PCB37PS-5P (5m)

Flat cable with one-end 37-Pin D-SUB connector
: PCA37P-1.5 (1.5m)
: PCA37P-3 (3m)
: PCA37P-5 (5m)

Shield cable with one-end 37-pin D-SUB connector
: PCA37PS-0.5P (0.5m)
: PCA37PS-1.5P (1.5m)
: PCA37PS-3P (3m)
: PCA37PS-5P (5m)

Connector (Option)

37pin D-SUB(male) connector Five-piece set
: CN5-D37M

⚠ CAUTION
The maximum current rate of each flat cable line (PCB37P-* and PCA37P-*) is 1 A; and the maximum current rate of each shield cable line (PCB37PS-*P and PCA37PS-*P) is 1 A. Should the boards be connected to devices that require larger current value than the above rates, you should prepare connecting cables yourself, instead of ordering our option cables.

Accessories

Accessories (Option)

Screw Terminal (M3 x 37P)	: EPD-37A *1*2
Screw Terminal (M3.5 x 37P)	: EPD-37 *1
General Purpose Terminal (M3 x 37P)	: DTP-3A *1
Screw Terminal (M2.6 x 37P)	: DTP-4A *1

*1 A PCB37P or PCB37PS optional cable is required separately.
*2 "Spring-up" type terminal is used to prevent terminal screws from falling off.
* Check the CONTEC's Web site for more information on these options.

Packing List

Board [RRY-16C-PE] …1
First step guide … 1
CD-ROM *1 [API-PAC(W32)] …1

*1 The CD-ROM contains the driver software and User's Guide.

How to connect the connectors

Connector shape

The on-board interface connector (CN1) is used when connecting this product and the external devices.

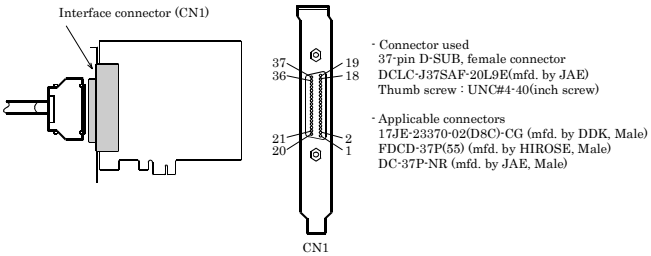

* Please refer to page 2 for more information on the supported cable and accessories.

Connector Pin Assignment

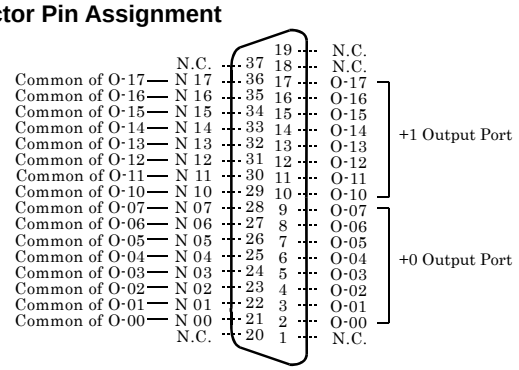

O-00 - O-17	16 output signal pins. Connect these pins to the input signal pins of the external device.
N00 - N17	Common pin corresponding to each output pin.
N.C.	No connection to this pin.

Output Signal Connection

Figure below shows the output circuit at the interface section of the board. The signal output section uses a relay contact method to send signals to the external device.

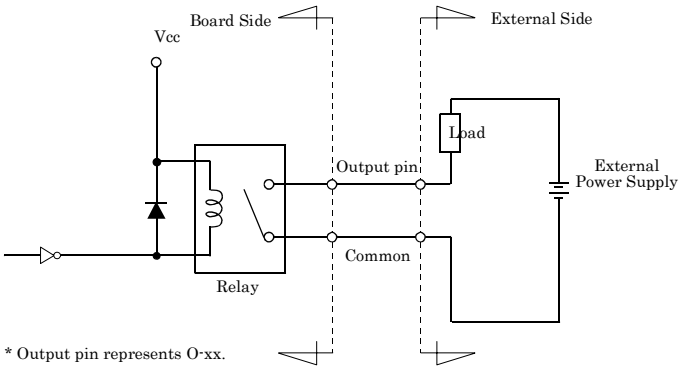

⚠ CAUTION
When the PC is turned on, all outputs are reset to OFF.

Difference from RRY-16C(PCI)H

The functions same with conventional product of RRY-16C(PCI)H are provided with the RRY-16C-PE. In addition, as there is compatibility in terms of connector shape and pin assignments, it is easy to migrate from the existing system. So you can use the same operating procedures as RRY-16C(PCI)H.
There are some differences in specifications as shown below.

	RRY-16C(PCI)H	RRY-16C-PE
Power consumption	5VDC 550mA (Max.)	3.3VDC 1100mA (Max.)
Bus specification	32bit, 33MHz, Universal key shapes supported (Supply 5V to the 5V pin)	PCI Express Base Specification Rev. 1.0a x1
Dimension (mm)	121.69(L) x 105.68(H)	121.69(L) x 110.18(H)
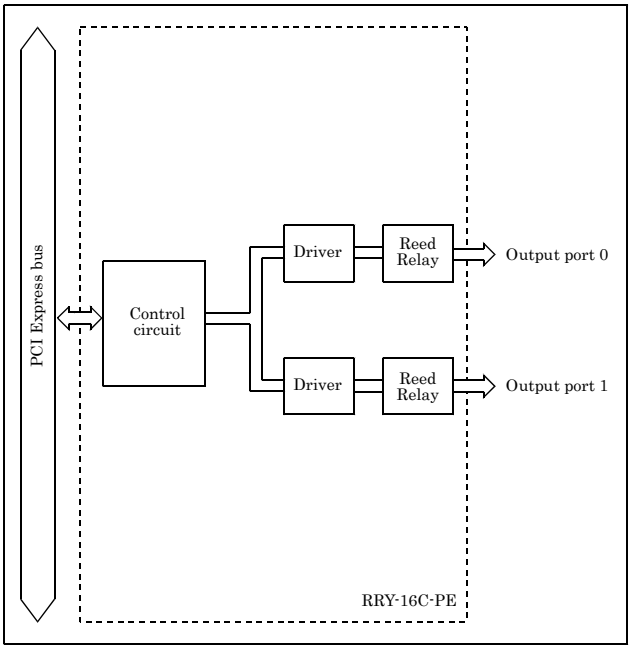
Block Diagram