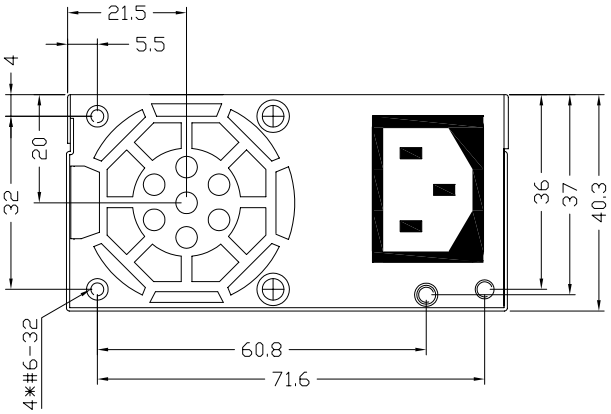

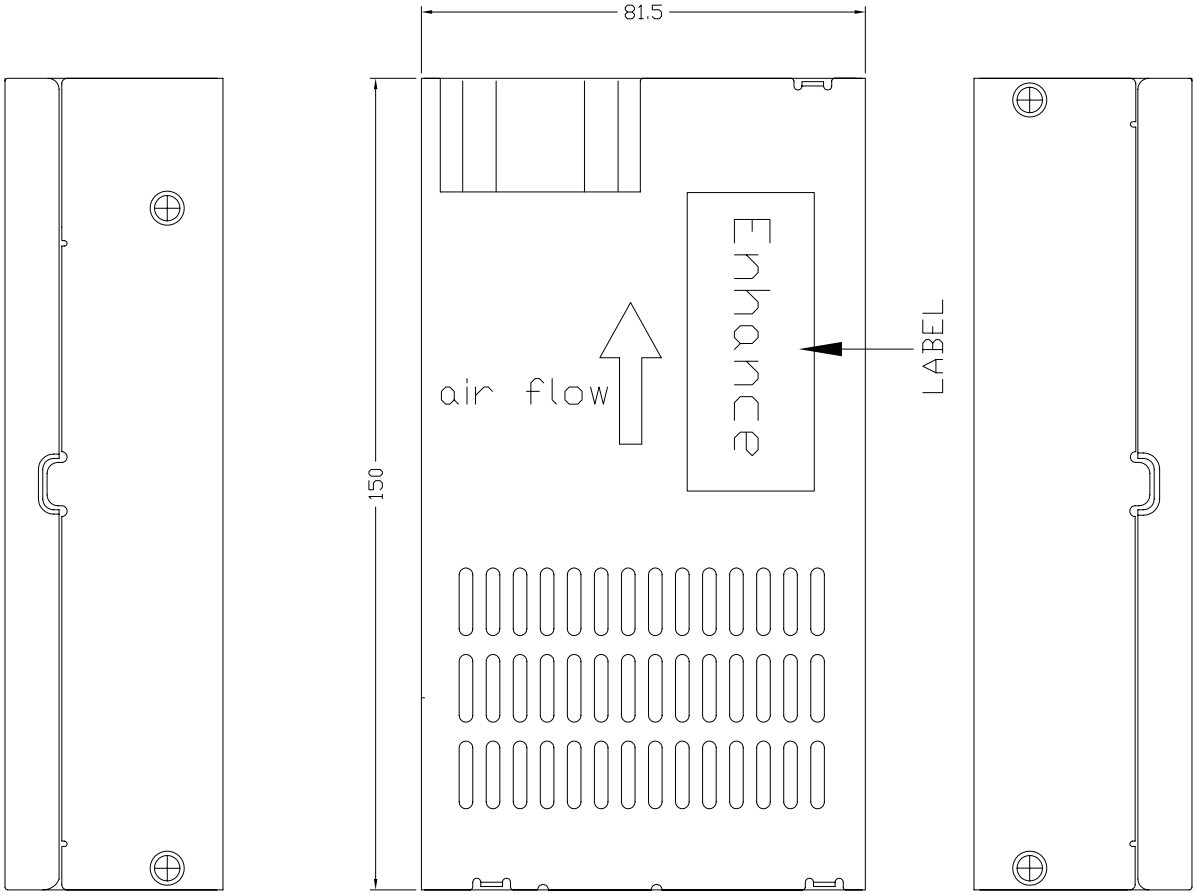

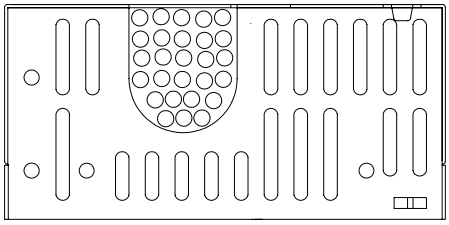

Enhance® ELECTRONICS CO.,LTD	TEXT: FLEX0100B				DRAWING NO:	
					ERP:	
REVISION:	DATE: 2015/03/26	DRAWN BY:	CHECKED BY:	APPROVED BY:	SCALE:	SHEET 1 OF 1